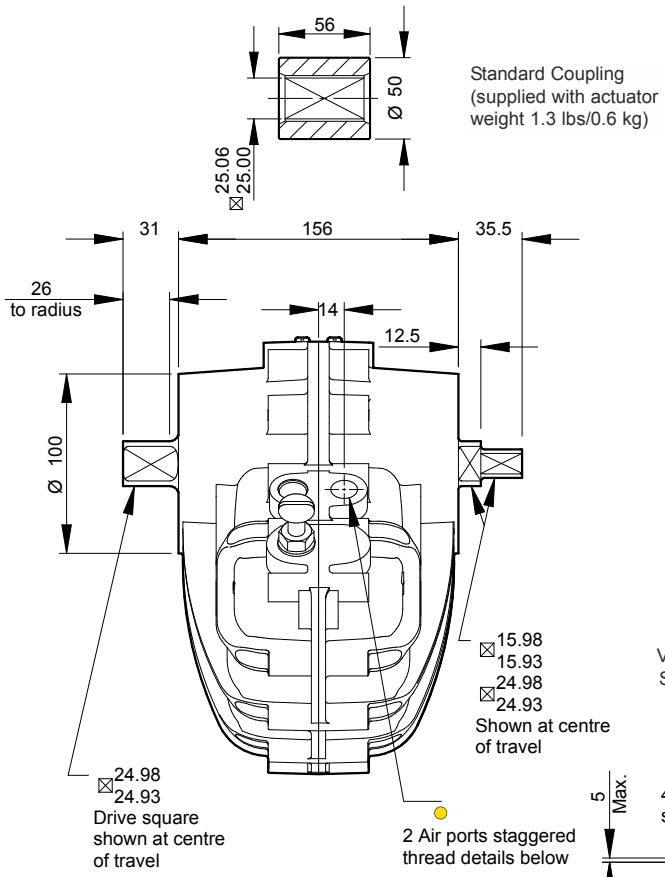

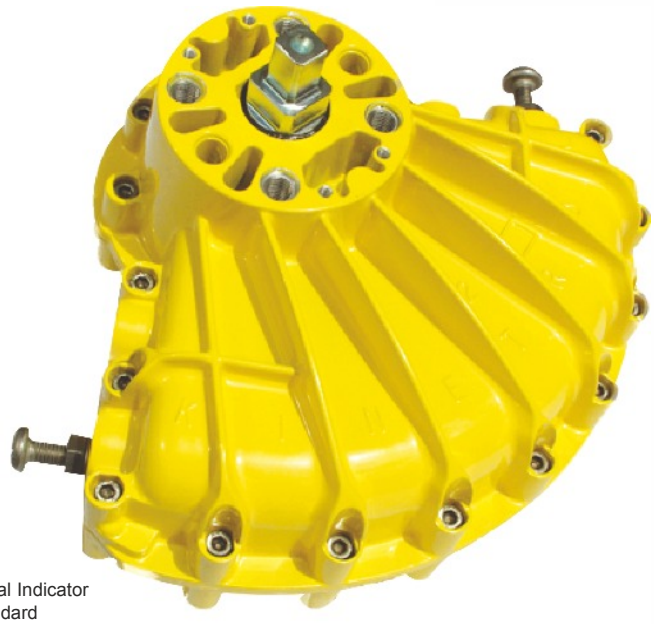

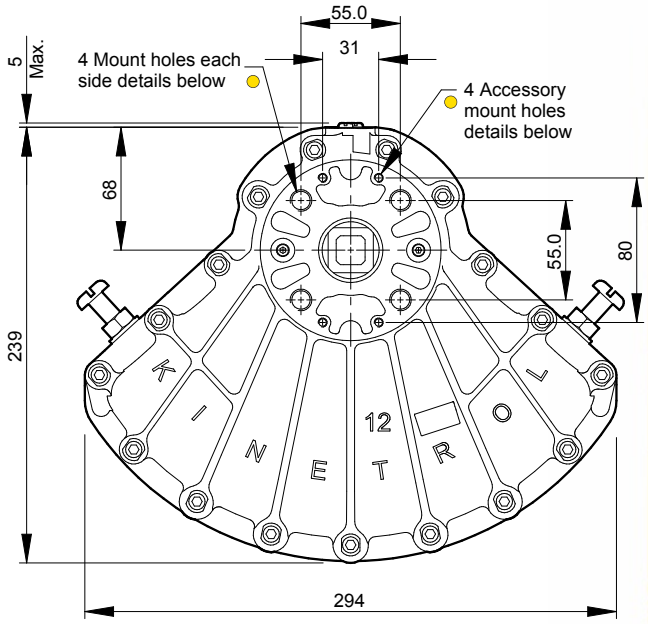

Air Port/Mount Hole Details

Model	Air Ports	Mount Holes & Accessory Mount Holes
124-100	$G^3/_8$	4 x M12 x 24 deep on 77.8 PCD 4 x M5 x 10 deep
127-100	$^3/_8$ NPT	4 x $^1/_2$ UNC x 0.94" deep on 3.06" PCD 4 x 10-24 x 3/8" deep

Options

- **Fail safe spring return units - clockwise or counter clockwise see pages 5-7**
- **Limit switch boxes for open/close indication - various switches for hazardous areas see pages 9-12**
- **Integral solenoid valve see page 20**
- **AP pneumatic positioner - full range of options see pages 17/18**
- **EL electropneumatic positioner - full range of options see pages 15/16**
- **P3 on/off positioner - full range of options including hazardous area see pages 21-23**
- **180° model see page 25/26**
- **Female drive and mounting details to DIN 3337 and ISO 5211 see page 50**
- **Spring to centre see page 24**
- **Geared manual override see page 46**
- **Code identification see page 62**
- **Torque outputs see pages 58-60**
- **See pages 49-52 for English dimensions and dimensions of spring options**
- **Accessory mount plate for positioners, switch boxes and clear cone monitor. See TD149.**
- **High Temperature / Low temperature options see page 50**

Specification

Output Torque

5000 lbf ins/575 Nm
at 100 psi/7 bar

Angle of Travel (adjustable)

80° - 102°
(restricted travel versions available)

Displaced Volume

86 in³/1410 cm³

Finish

Epoxy stove enamel

Weight

15.2 lb/6.9 kg
(excluding coupling)

For further information see General Specification on page 50.

ATEX CATEGORY 2 APPROVED